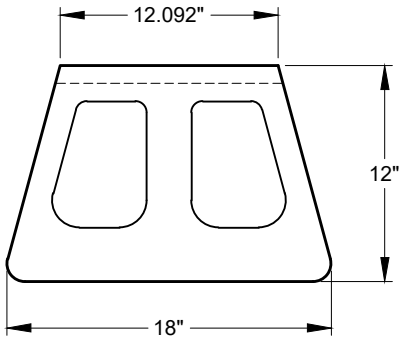

TOP VIEW

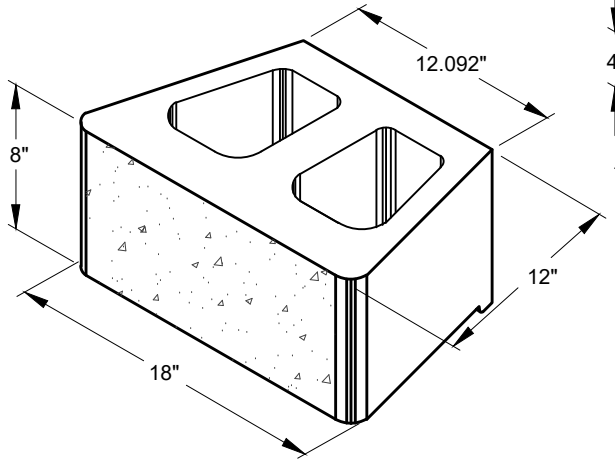

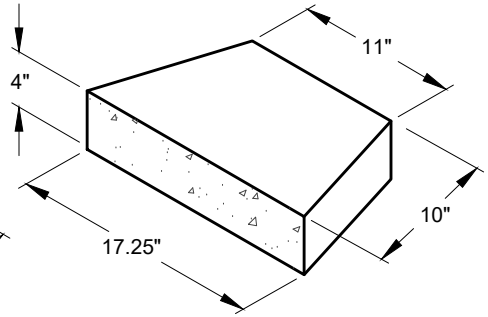

CAP UNIT

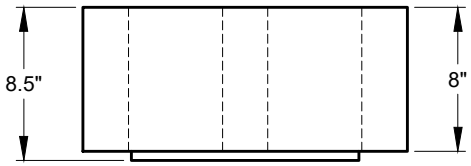

FRONT VIEW

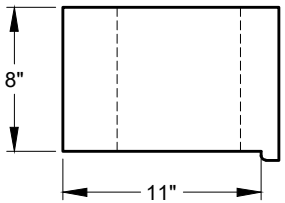

SIDE VIEW

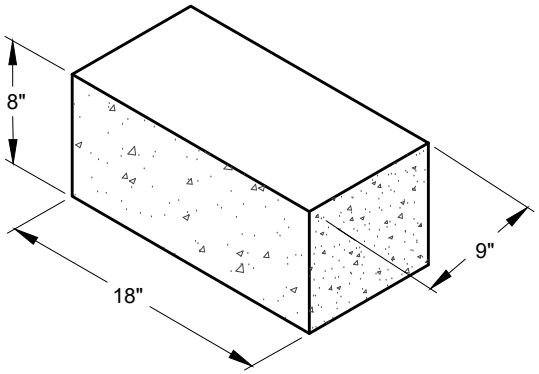

CORNER UNIT

ANCHOR DIAMOND

This drawing is for illustrative purposes only and should not be used for construction without the signature of a registered professional engineer.

www.anchordiamond.com

Diamond Pro® Retaining Wall System

Individual Block Details - Stone Cut Face

Scale:	Drawn by:
3/8" = 1'-0"	SB
Date:	Drawing number:
8/8/2022	DP35