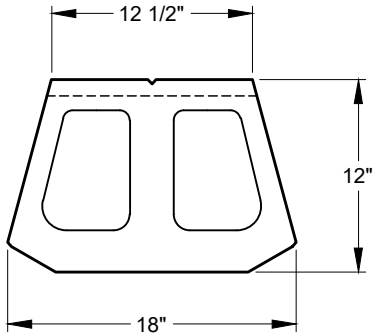


TOP VIEW

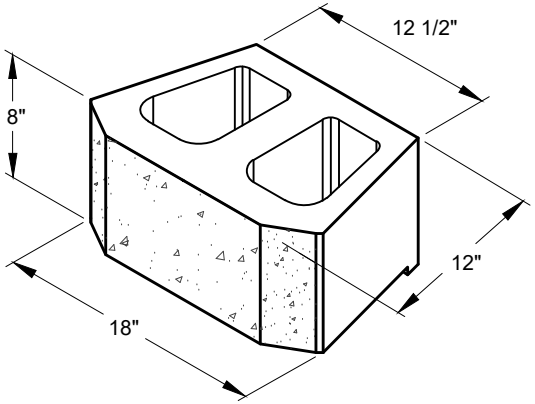


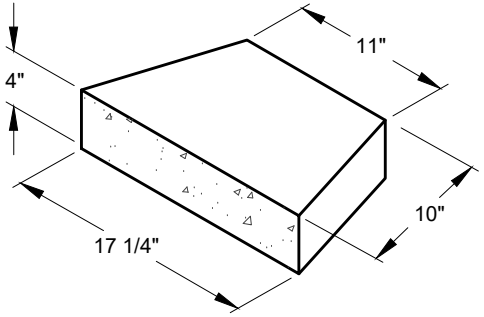


CAP UNIT

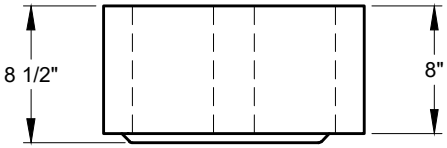


FRONT VIEW

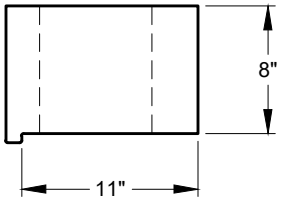


SIDE VIEW

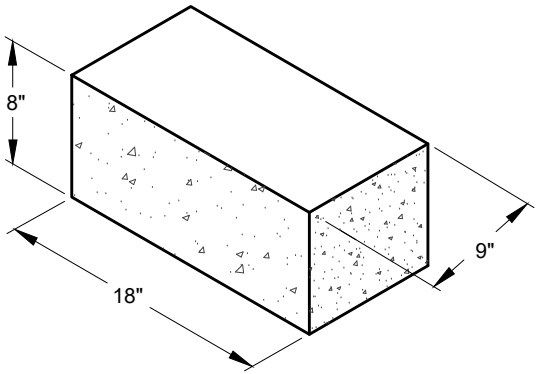


CORNER UNIT

ANCHOR DIAMOND

This drawing is for illustrative purposes only and should not be used for construction without the signature of a registered professional engineer.

www.anchordiamond.com



# Diamond Pro® Retaining Wall System

## Individual Block Details - Beveled Face

| Scale: | Drawn by: |
|---|---|
| 3/8" = 1'-0" | SB |
| Date: | Drawing number: |
| 8/8/2022 | DP33 |