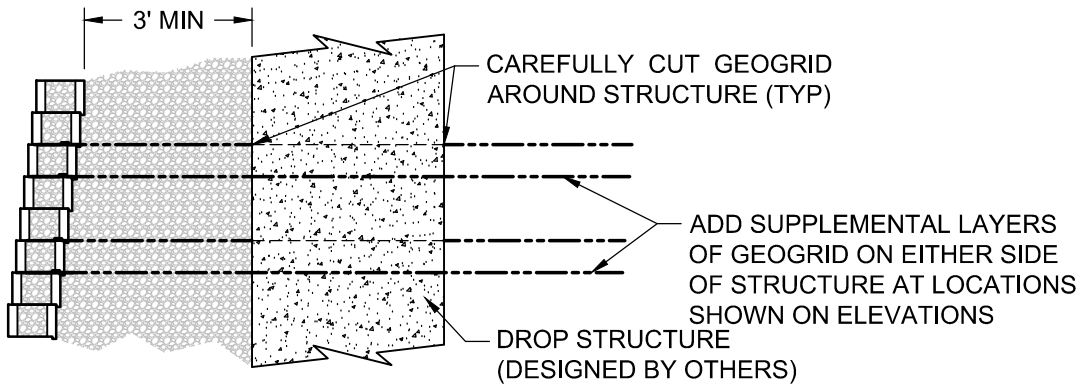

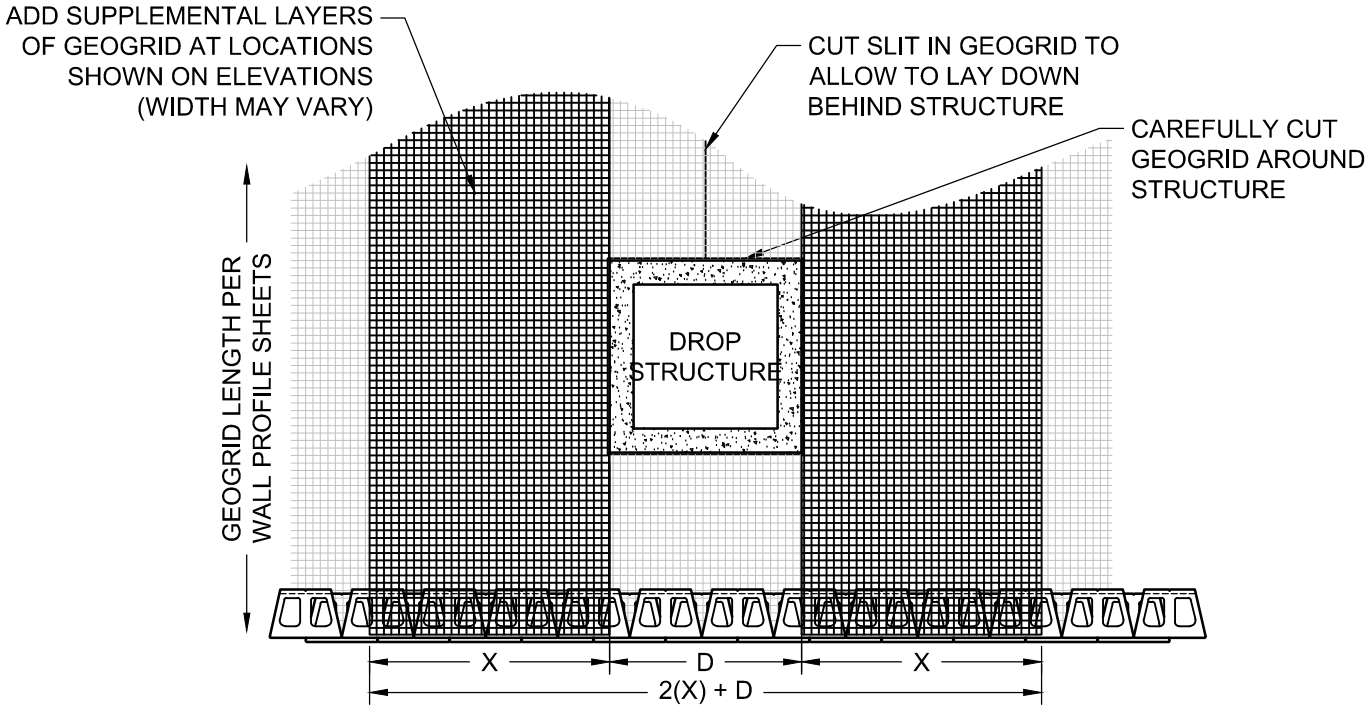

ANCHOR®
BUILD SOMETHING BEAUTIFUL

© 2016 Anchor Wall Engineering, LLC
® and ™ Anchor Wall Systems, Inc.
www.anchorwall.com

This drawing is for illustrative purposes only and should not be used for construction without the signature of a registered professional engineer.

Diamond Pro® Straight Face Retaining Wall System

Typical Drop Structure Behind Wall

Scale:	Drawn by:
1/4" = 1'-0"	SB
Date:	Drawing number:
1/19/2016	DPST25