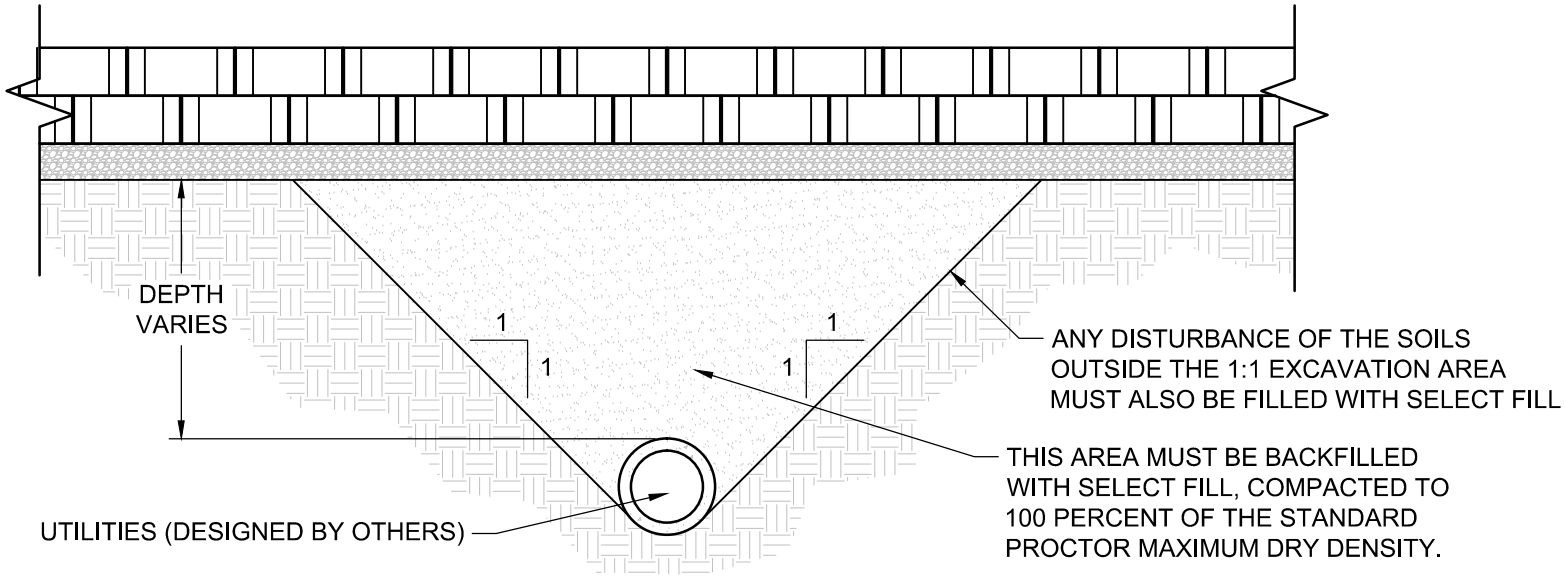

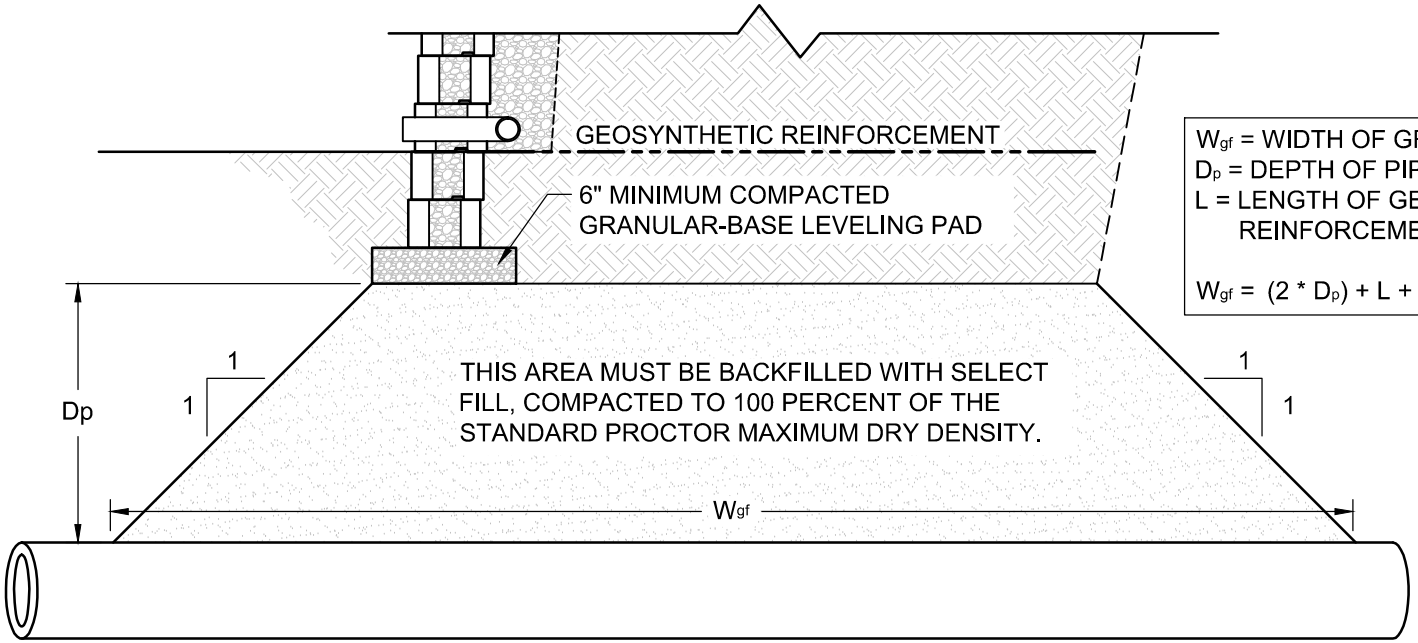

W_{gf} = WIDTH OF GRANULAR FILL
D_p = DEPTH OF PIPE
L = LENGTH OF GEOSYNTHETIC REINFORCEMENT

$W_{gf} = (2 * D_p) + L + 6"$

ANCHOR® BUILD SOMETHING BEAUTIFUL

© 2015 Anchor Wall Engineering, LLC
® and ™ Anchor Wall Systems, Inc.
www.anchorwall.com

This drawing is for illustrative purposes only and should not be used for construction without the signature of a registered professional engineer.

Vertica® Beveled Face Retaining Wall System

Typical Details For Utilities Below Wall

Scale:	Drawn by:
3/8" = 1'-0"	JB
Date:	Drawing number:
1/19/2016	VTBV22